Radio / Navigation system (RNS-E) - Satellite Radio

From November 2004

Notes:

Information for

- Relay and fuse arrangements
- Connector arrangements
- Control Modules and Relays
- Ground connections

⇒ Component Locations!

Information for

- Troubleshooting Procedures

⇒ Guided Fault Finding using VAS 5051/5052

Protected by copyright. Copying for private or commercial purposes, in part or in whole, is not permitted unless authorised by AUDI AG. AUDI AG does not guarantee or accept any liability with respect to the correctness of information in this document. Copyright by AUDI AG.

Protected by copyright. Copying for private or commercial purposes, in part or in whole, is not permitted unless authorised by AUDI AG. AUDI AG does not guarantee or accept any liability with respect to the correctness of information in this document. Copyright by AUDI AG.

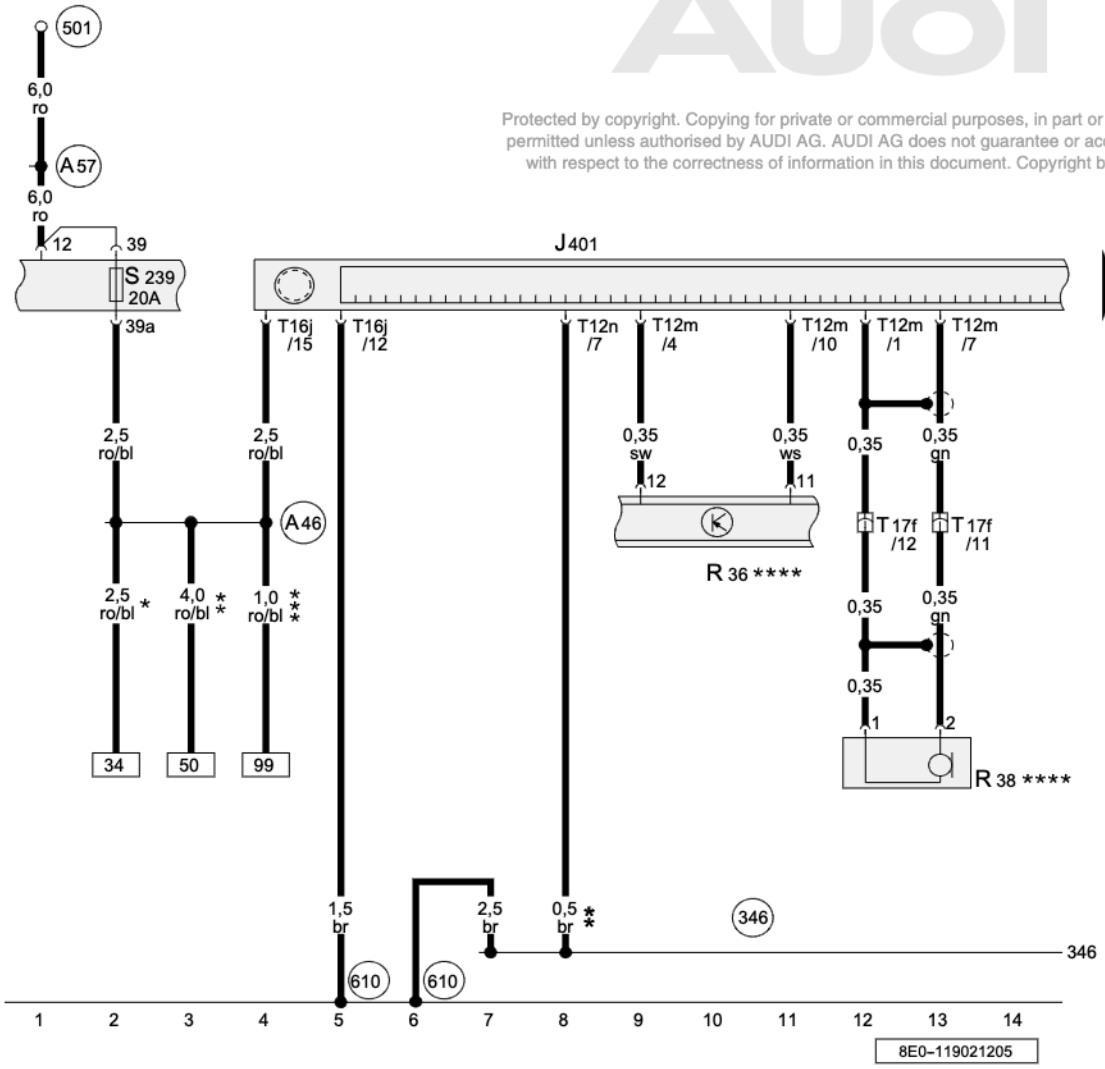

ws = white
sw = black
ro = red
br = brown
gn = green
bl = blue
gr = grey
li = lilac
ge = yellow
or = orange
rs = pink

Navigation System with CD Drive Control Module

J401	Navigation System with CD Drive Control Module
R36	Telephone Transceiver
R38	Telephone Microphone
T12m	12-Pin Connector, green, Connector C
T12n	12-Pin Connector, blue, Connector B
T16j	16-Pin Connector, black, Connector D
T17f	17-Pin Connector, orange, connector station A-pillar, left
S239	Fuse (on fuse panel)
346	Audio Ground Connection (in instrument panel wiring harness)
501	Threaded Connection 2 - terminal 30 (on relay panel)
610	Ground Connection (Audio) (under center console, front)
A46	Plus Connection (Radio 30) (in instrument panel wiring harness)
A57	Plus Connection 3 (30) (in instrument panel wiring harness)
*	with Amplified Speaker only
**	with Bose Speaker only
***	with Satellite Radio only
****	with telephone only (with voice operation system)

Front Bass Speaker, Front Midrange Speaker

J401	Navigation System with CD Drive Control Module
R21	Left Front Bass Speaker
R23	Right Front Bass Speaker
R26	Left Front Midrange Speaker
R27	Right Front Midrange Speaker
R70	Inside Loudspeaker
T8q	8-Pin Connector, brown, Connector A
T20	20-Pin Connector, black, door A-pillar, left
T20a	20-Pin Connector, black, door A-pillar, right
346	Audio Ground Connection (in instrument panel wiring harness)
*	with Amplified Speaker only

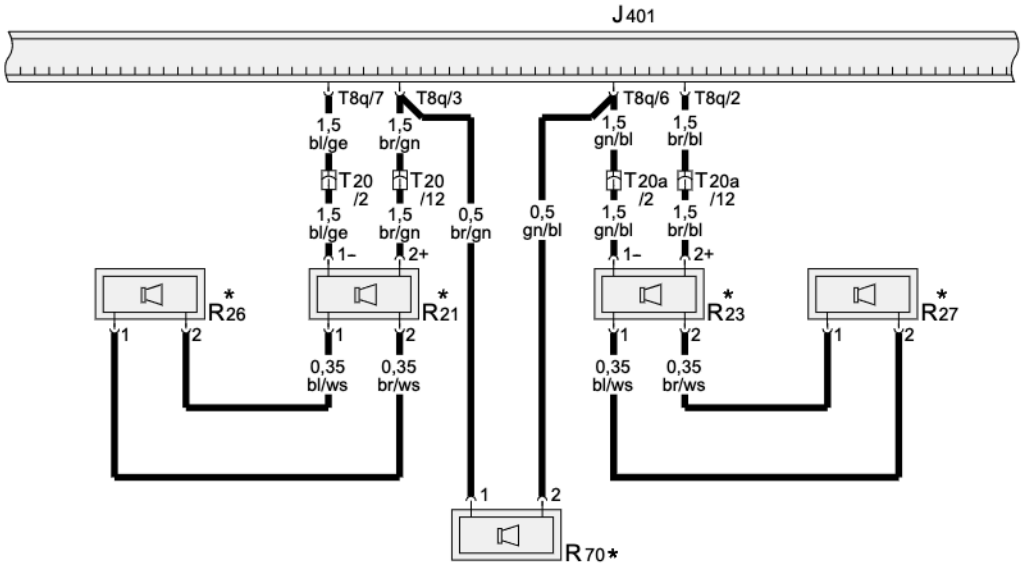

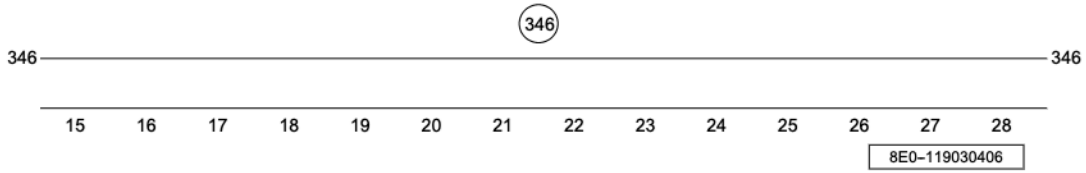

ws	=	white
sw	=	black
ro	=	red
br	=	brown
gn	=	green
bl	=	blue
gr	=	grey
li	=	lilac
ge	=	yellow
or	=	orange
rs	=	pink

Protected by copyright. Copying for private or commercial purposes, in part or in whole, is not permitted unless authorised by AUDI AG. AUDI AG does not guarantee or accept any liability with respect to the correctness of information in this document. Copyright by AUDI AG.

Rear Bass Speaker, Rear Midrange Speaker

J401	Navigation System with CD Drive Control Module
R12	Amplifier
R15	Left Rear Bass Speaker
R17	Right Rear Bass Speaker
R34	Left Rear Midrange Speaker
R35	Right Rear Midrange Speaker
R100	Bass Loudspeaker
T12m	12-Pin Connector, green, Connector C
T16j	16-Pin Connector, black, Connector D
T20b	20-Pin Connector, black, door B-pillar, left
T20c	20-Pin Connector, black, door B-pillar, right
346	Audio Ground Connection (in instrument panel wiring harness)
V28	Connection 1 (in radio wiring harness)
*	with Amplified Speaker only

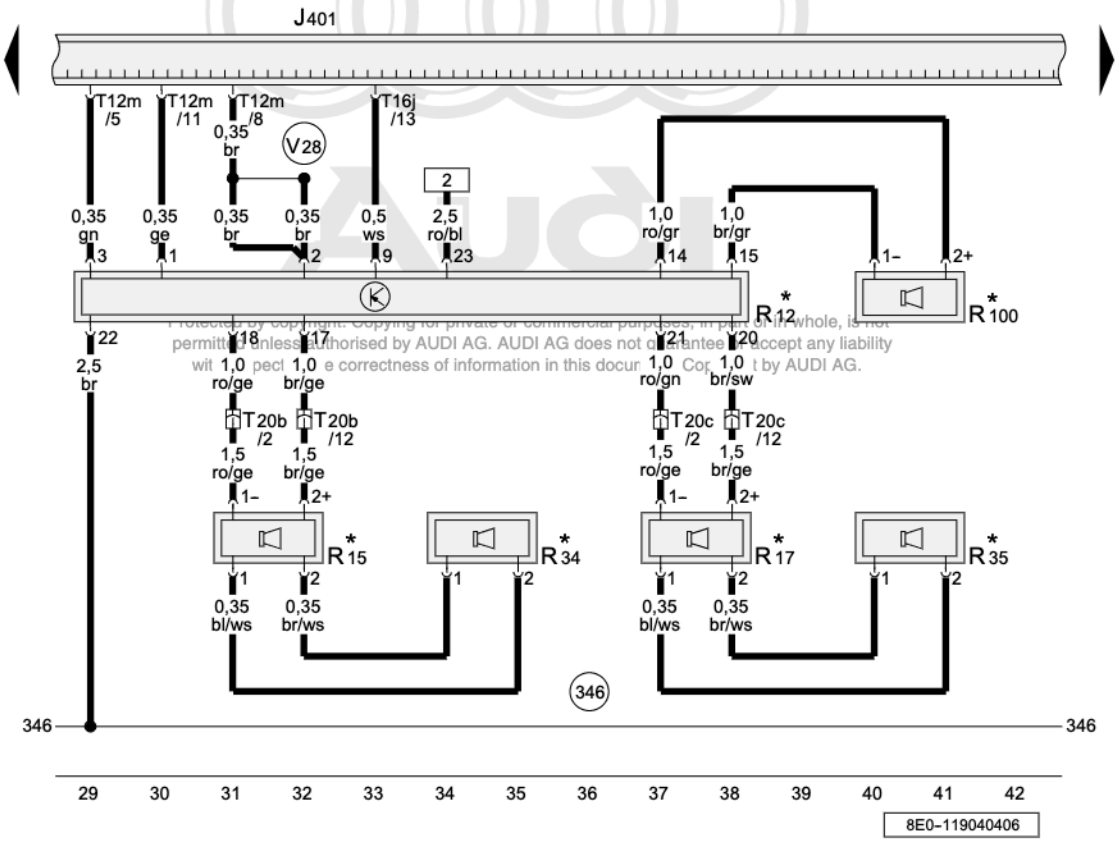

Protected by copyright. Copying for private or commercial purposes, in part or in whole, is not permitted unless authorised by AUDI AG. AUDI AG does not guarantee or accept any liability with respect to the correctness of information in this document. Copyright by AUDI AG.

ws	=	white
sw	=	black
ro	=	red
br	=	brown
gn	=	green
bl	=	blue
gr	=	grey
li	=	lilac
ge	=	yellow
or	=	orange
rs	=	pink

Bose-Amplifier, Front Bass Speaker, Front Midrange Speaker

J401	Navigation System with CD Drive Control Module
R12	Amplifier
R21	Left Front Bass Speaker
R23	Right Front Bass Speaker
R26	Left Front Midrange Speaker
R27	Right Front Midrange Speaker
R70	Inside Loudspeaker
T12m	12-Pin Connector, green, Connector C
T16j	16-Pin Connector, black, Connector D
T20	20-Pin Connector, black, door A-pillar, left
T20a	20-Pin Connector, black, door A-pillar, right
133	Ground Connection (in speaker wiring harness)
255	Ground Connection 1 (in radio wiring harness)
346	Audio Ground Connection (in instrument panel wiring harness)
*	with Bose Speaker only

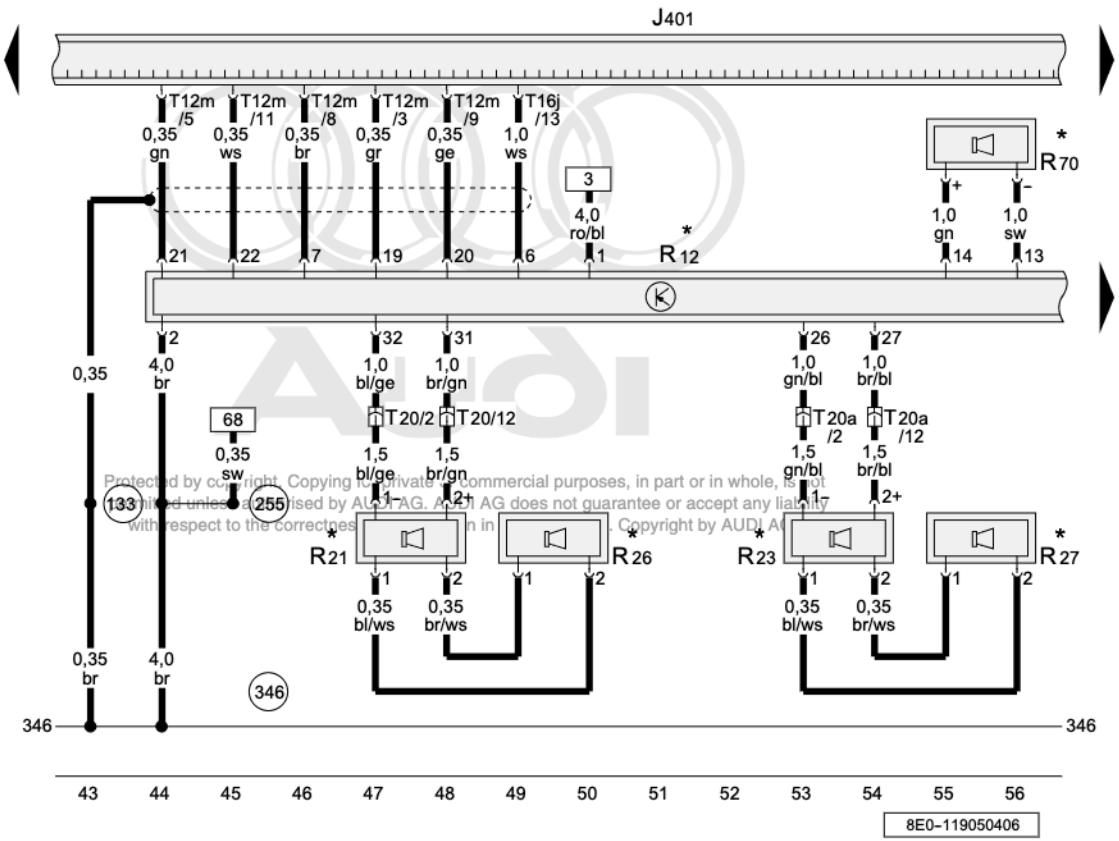

Protected by copyright. Copying for private or commercial purposes, in part or in whole, is not permitted unless authorised by AUDI AG. AUDI AG does not guarantee or accept any liability with respect to the correctness of information in this document. Copyright by AUDI AG.

ws	=	white
sw	=	black
ro	=	red
br	=	brown
gn	=	green
bl	=	blue
gr	=	grey
li	=	lilac
ge	=	yellow
or	=	orange
rs	=	pink

Bose-Amplifier, Rear Bass Speaker, Rear Midrange Speaker

J401	Navigation System with CD Drive Control Module
R12	Amplifier
R15	Left Rear Bass Speaker
R17	Right Rear Bass Speaker
R34	Left Rear Midrange Speaker
R35	Right Rear Midrange Speaker
R74	Inside Microphone
R100	Bass Loudspeaker
T17g	17-Pin Connector, dark brown, connector station A-pillar, left
T20b	20-Pin Connector, black, door B-pillar, left
T20c	20-Pin Connector, black, door B-pillar, right
346	Audio Ground Connection (in instrument panel wiring harness)
*	with Bose Speaker only

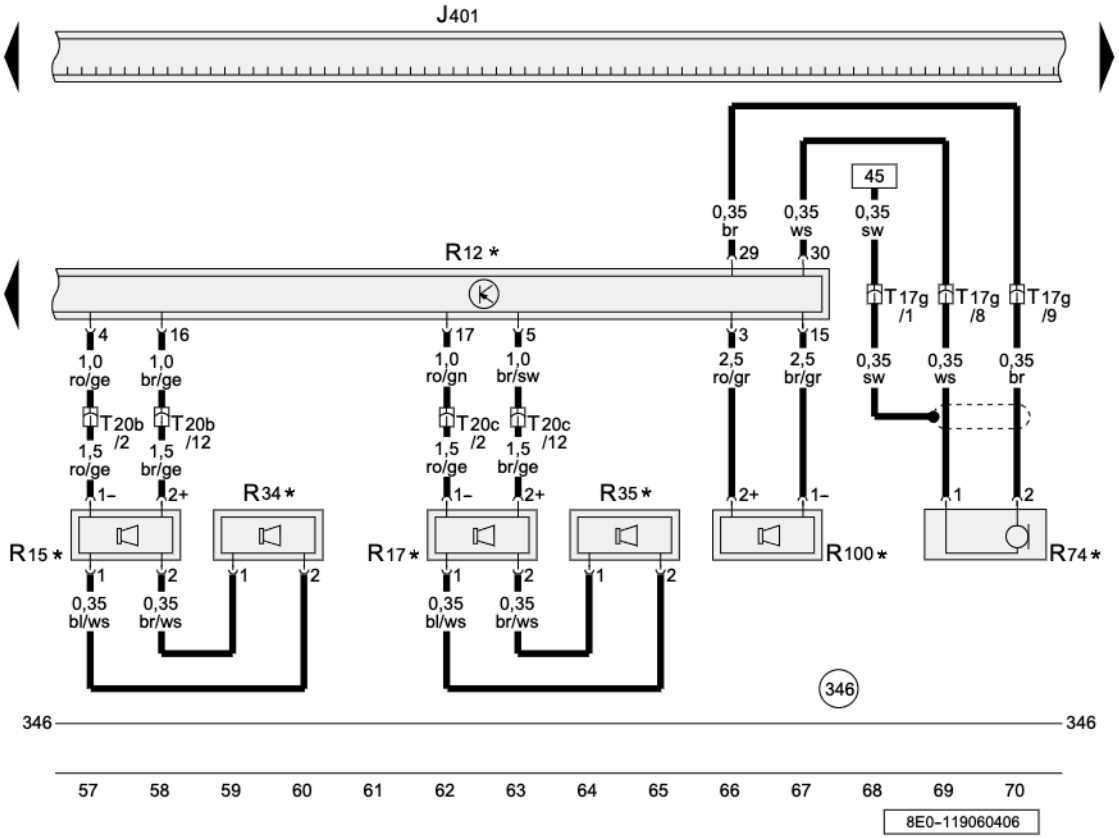

ws	=	white
sw	=	black
ro	=	red
br	=	brown
gn	=	green
bl	=	blue
gr	=	grey
li	=	lilac
ge	=	yellow
or	=	orange
rs	=	pink

Protected by copyright. Copying for private or commercial purposes, in part or in whole, is not permitted unless authorised by AUDI AG. AUDI AG does not guarantee or accept any liability with respect to the correctness of information in this document. Copyright by AUDI AG.

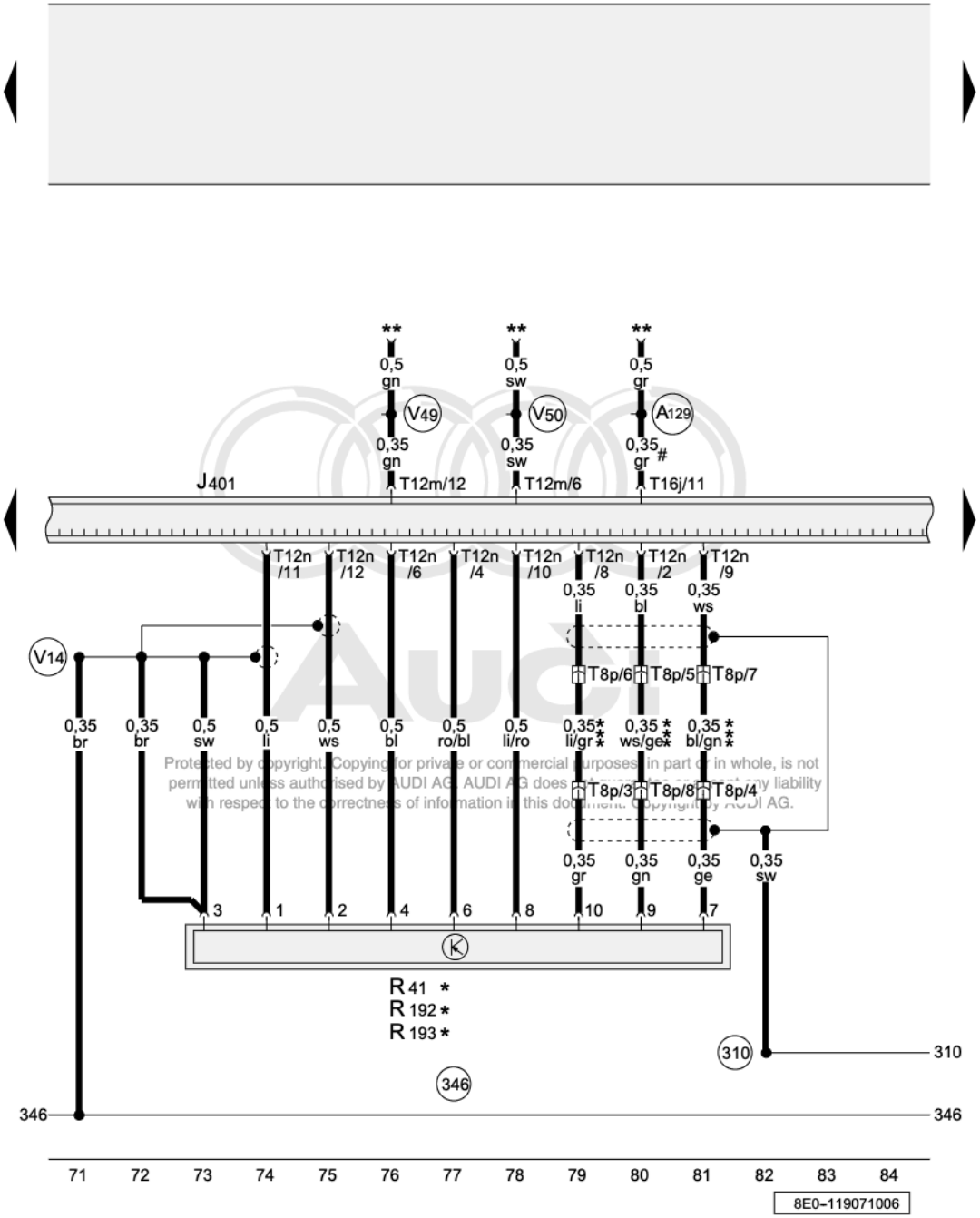

Protected by copyright. Copying for private or commercial purposes, in part or in whole, is not permitted unless authorised by AUDI AG. AUDI AG does not guarantee or assume any liability with respect to the correctness of information in this document. Copyright by AUDI AG.

ws	=	white
sw	=	black
ro	=	red
br	=	brown
gn	=	green
bl	=	blue
gr	=	grey
li	=	lilac
ge	=	yellow
or	=	orange
rs	=	pink

CD Changer, iPod Baseplate, USB Connection Baseplate - without Satellite Radio

J401	Navigation System with CD Drive Control Module
R41	CD Changer
R192	iPod Baseplate
R193	USB Connection Baseplate
T8p	8-Pin Connector, black, on Satellite Radio
T12m	12-Pin Connector, green, Connector C
T12n	12-Pin Connector, blue, Connector B
T16j	16-Pin Connector, black, Connector D
310	Shielding Ground Connection 2 (in CD changer wiring harness)
346	Audio Ground Connection (in instrument panel wiring harness)
A129	Mute Connection (in instrument panel wiring harness)
V14	Connection (shielding) (in CD-changer wiring harness)
V49	Low Frequency + Connection (in communication wiring harness)
V50	Low Frequency - Connection (in communication wiring harness)
*	with CD Changer Unit or iPod Baseplate or USB Connection Baseplate only
**	⇒ applicable Telephone wiring diagram
***	without Satellite Radio only
#	discontinued from 2006 m. y.

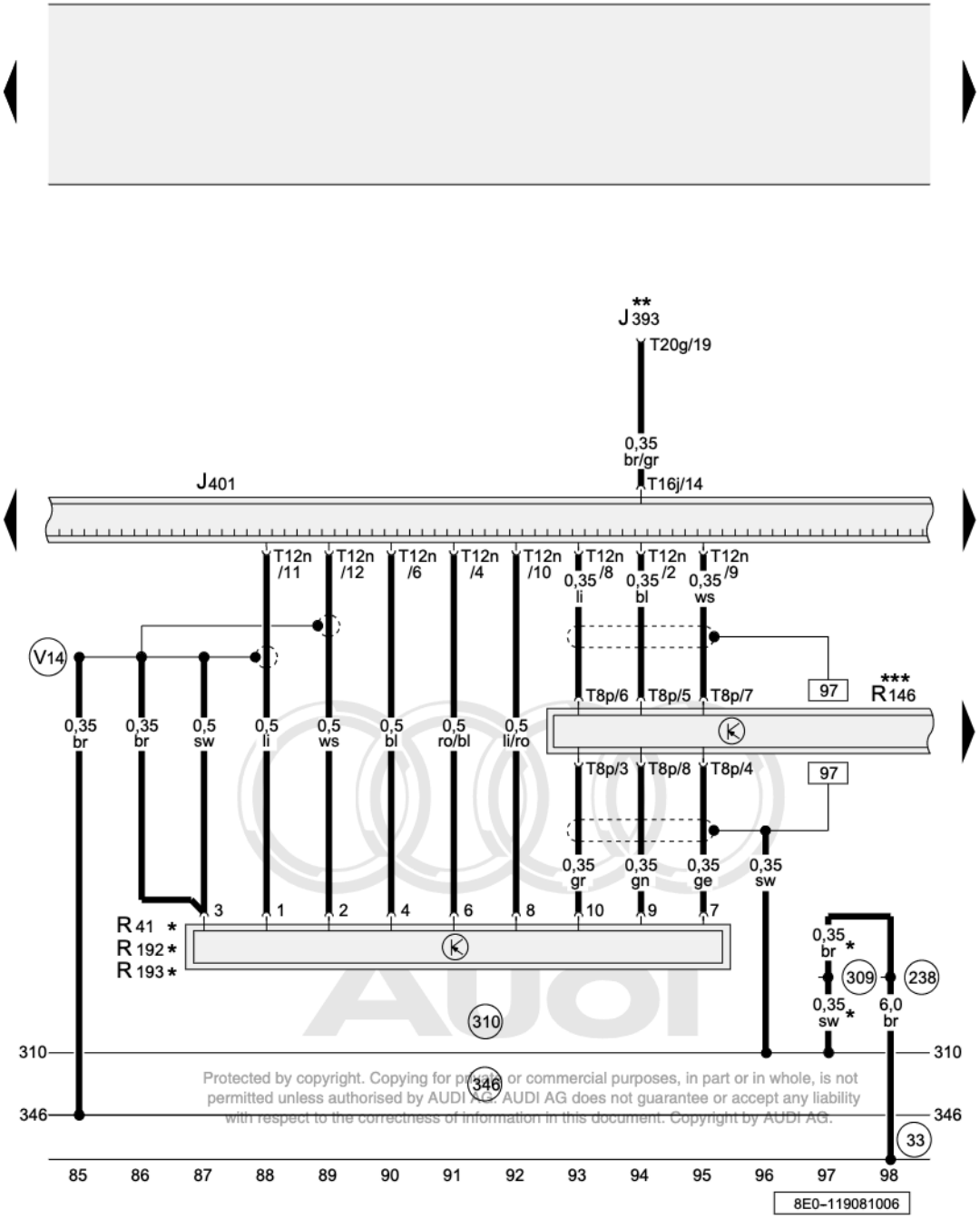

Protected by copyright. Copying for private or commercial purposes, in part or in whole, is not permitted unless authorised by AUDI AG. AUDI AG does not guarantee or accept any liability with respect to the correctness of information in this document. Copyright by AUDI AG.

ws	=	white
sw	=	black
ro	=	red
br	=	brown
gn	=	green
bl	=	blue
gr	=	grey
li	=	lilac
ge	=	yellow
or	=	orange
rs	=	pink

CD Changer, iPod Baseplate, USB Connection Baseplate - with Satellite Radio

J393	Comfort System Central Control Module
J401	Navigation System with CD Drive Control Module
R41	CD Changer
R146	Satellite Radio
R192	iPod Baseplate
R193	USB Connection Baseplate
T8p	8-Pin Connector, black, on Satellite Radio
T12n	12-Pin Connector, blue, Connector B
T16j	16-Pin Connector, black, Connector D
T20g	20-Pin Connector, red, on central control module for comfort system
33	Ground Connection (behind instrument panel, right)
238	Ground Connection 1 (in interior wiring harness)
309	Shielding Ground Connection 1 (in CD changer wiring harness)
310	Shielding Ground Connection 2 (in CD changer wiring harness)
346	Audio Ground Connection (in instrument panel wiring harness)
V14	Connection (shielding) (in CD-changer wiring harness)
*	with CD Changer Unit or iPod Baseplate or USB Connection Baseplate only
**	with alarm system only
***	with Satellite Radio only

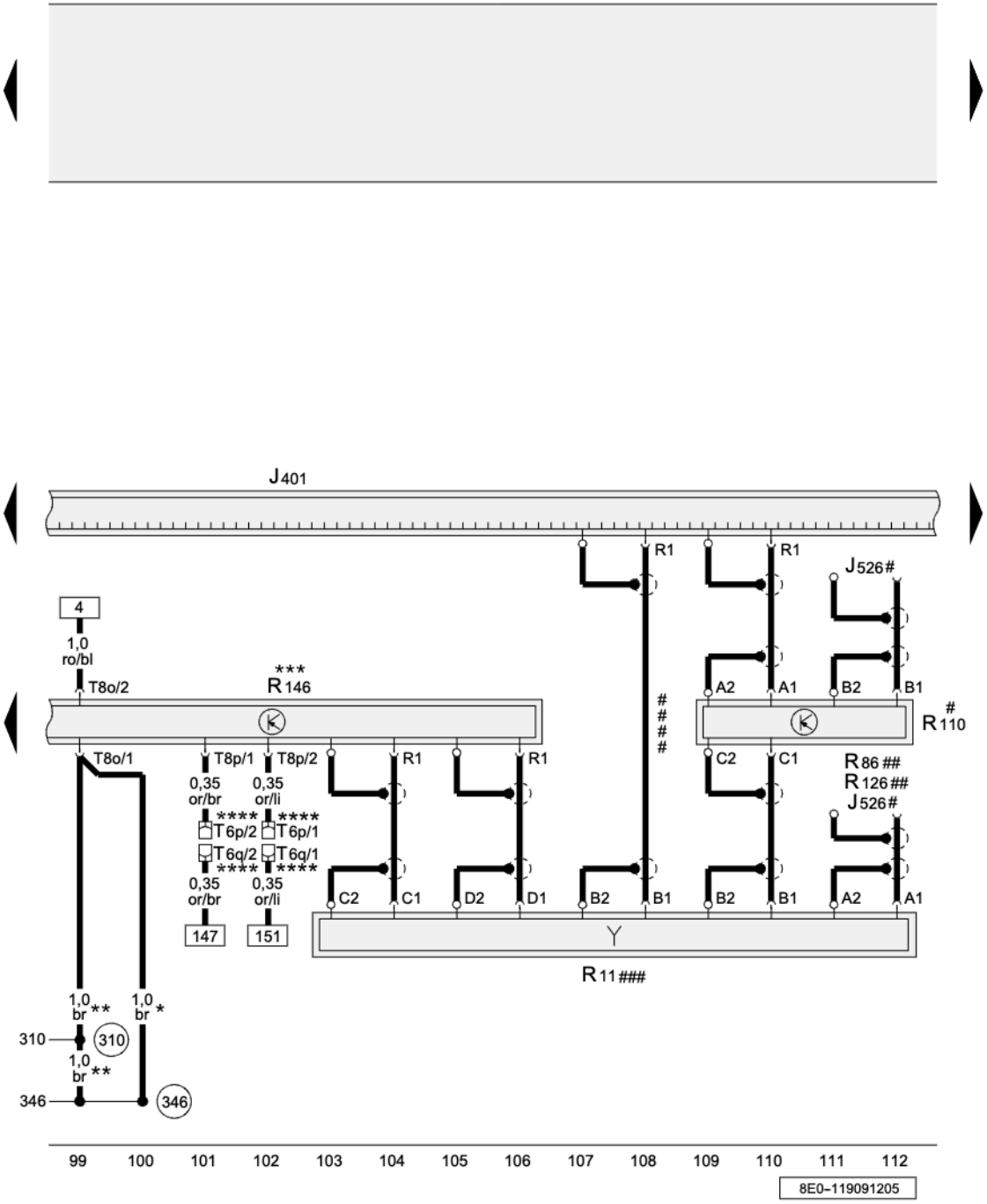

Satellite Radio, Roof Antenna

J401	Navigation System with CD Drive Control Module
J526	Telephone/Telematics Control Module
R11	Antenna
R86	Telephone Amplifier
R110	GPS Antenna Splitter
R126	Telephone Baseplate
R146	Satellite Radio
T6p	6-Pin Connector, lilac, connector station A-pillar, right
T6q	6-Pin Connector, lilac, connector station A-pillar, right
T8o	8-Pin Connector, black, on Satellite Radio
T8p	8-Pin Connector, black, on Satellite Radio
310	Shielding Ground Connection 2 (in CD changer wiring harness)
346	Audio Ground Connection (in instrument panel wiring harness)
*	with CD Changer Unit only
**	without CD Changer Unit only
***	with Satellite Radio only
****	Connectors T6p and T6q must connected when installing Satellite Radio
#	discontinued from 2006 m.y., ⇒ applicable wiring diagram for telematic
##	with cellular telephone only
###	Roof Antenna
####	without GPS Antenna Splitter only

Protected by copyright. Copying for private or commercial purposes, in part or in whole, is not permitted unless authorised by AUDI AG. AUDI AG does not guarantee or accept any liability with respect to the correctness of information in this document. Copyright by AUDI AG.

ws	=	white
sw	=	black
ro	=	red
br	=	brown
gn	=	green
bl	=	blue
gr	=	grey
li	=	lilac
ge	=	yellow
or	=	orange
rs	=	pink

Antenna - Avant

J393	Comfort System Central Control Module
J401	Navigation System with CD Drive Control Module
R64	Auxiliary Heater Radio Receiver
R108	Left Antenna Module
T3n	3-Pin Connector
T3o	3-Pin Connector
T16i	16-Pin Connector, brown, on central control module for comfort system
*	not applicable US/CDN
**	Left Rear Side Window Antenna
***	Rear Window Antenna
****	Right Rear Side Window Antenna

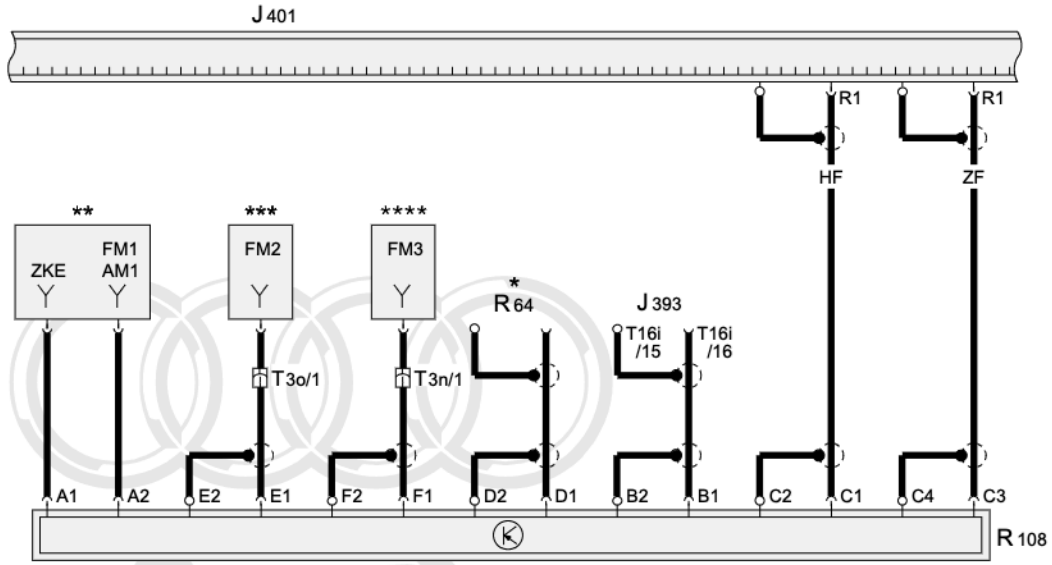

ws	=	white
sw	=	black
ro	=	red
br	=	brown
gn	=	green
bl	=	blue
gr	=	grey
li	=	lilac
ge	=	yellow
or	=	orange
rs	=	pink

Protected by copyright. Copying for private or commercial purposes, in part or in whole, is not permitted unless authorised by AUDI AG. AUDI AG does not guarantee or accept any liability with respect to the correctness of information in this document. Copyright by AUDI AG.

113 114 115 116 117 118 119 120 121 122 123 124 125 126

8E0-119101205

Antenna - Sedan

J393	Comfort System Central Control Module
J401	Navigation System with CD Drive Control Module
J515	Antenna Selection Control Module
R50	Navigation System Antenna
R64	Auxiliary Heater Radio Receiver
T16i	6-Pin Connector, brown, behind side trim, rear left
*	not applicable US/CDN
****	Rear Window Antenna

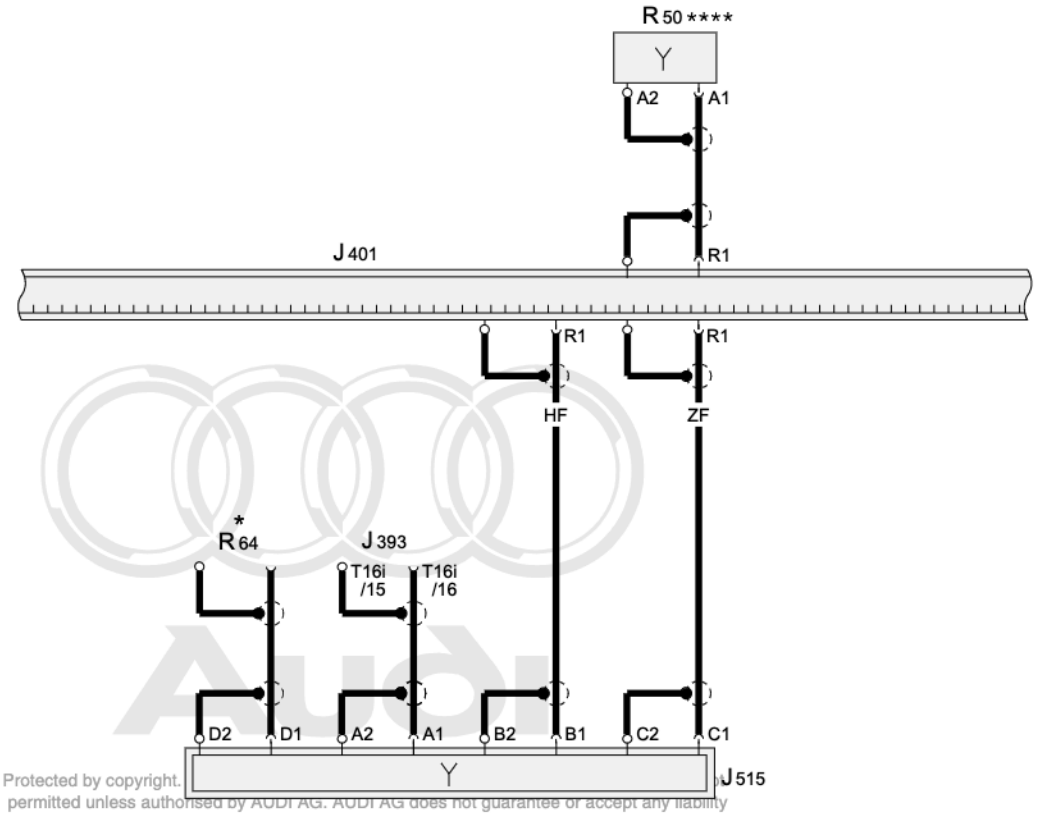

Protected by copyright. permitted unless authorised by AUDI AG. AUDI AG does not guarantee or accept any liability with respect to the correctness of information in this document. Copyright by AUDI AG.

ws	=	white
sw	=	black
ro	=	red
br	=	brown
gn	=	green
bl	=	blue
gr	=	grey
li	=	lilac
ge	=	yellow
or	=	orange
rs	=	pink

127 128 129 130 131 132 133 134 135 136 137 138 139 140

8E0-119111205

Instrument Cluster Control Module, CAN-Bus (Data bus)

J285	Instrument Cluster Control Module
J401	Navigation System with CD Drive Control Module
T12n	12-Pin Connector, blue, Connector B
T16	16-Pin Connector, black, diagnostic connection
T16j	16-Pin Connector, black, Connector D
T32	32-Pin Connector, blue, on instrument panel insert
A159	Connection (L) (in instrument panel wiring harness)
A178	Infotainment High-Bus Connection (in instrument panel wiring harness)
A179	Infotainment Lo-bus Connection (in instrument panel wiring harness)
◆?	CAN-Bus (Data bus)
***	with Satellite Radio only

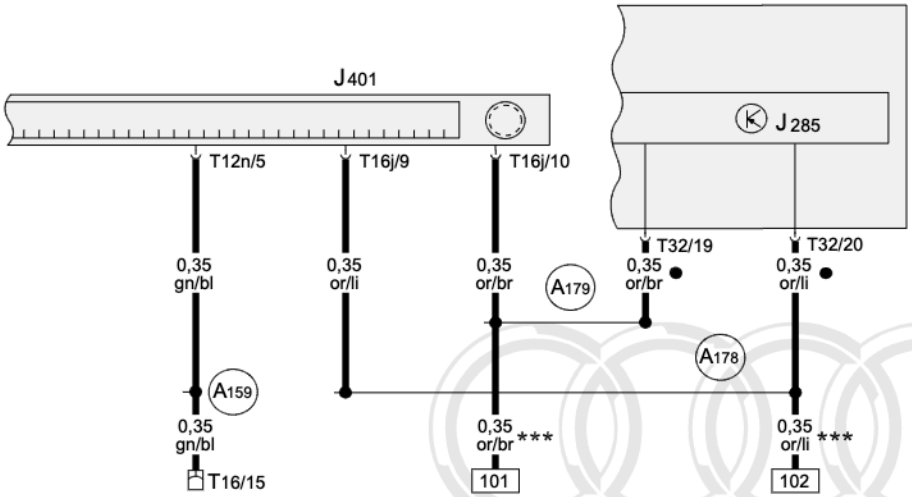

Protected by copyright. Copying for private or commercial purposes, in part or in whole, is not permitted unless authorised by AUDI AG. AUDI AG does not guarantee or accept any liability with respect to the correctness of information in this document. Copyright by AUDI AG.

ws	=	white
sw	=	black
ro	=	red
br	=	brown
gn	=	green
bl	=	blue
gr	=	grey
li	=	lilac
ge	=	yellow
or	=	orange
rs	=	pink

141 142 143 144 145 146 147 148 149 150 151 152 153 154

8E0-119121205